XYLIO-R

APPLICATION

- FACTORY, INDUSTIAL ZONE, LOGISTIC SITE,
- AIRPORT
- RESORT
- VILLA
- APARTMENT
- SCHOOL, GOVERNMENT AGENCY

REFERENCE IMAGE





BENEFIT

- **Strong, Beautiful feeling, nice design, nice finhsing, level up company brand,**
- **No Accessories needed but using special post and panel design and fix by Stainless steel pin.**

=> No damage the finishing coating in installation progress.
=> The life cycle of fence doesn't effected by accessories.
=> Impossible to remove the panel once installed.

- **Adopt international advanced, high-adherence 120 micromet Polyester (PE) coating (Use for Car industrial)**

=> A very beautiful finishing feeling and keep long-last for your factory.

- **Easy & Quick installation (100m per day/ team 3 people)**
- **Applicable for all types of configurarions: Curves, Corners, Slopes, on walls... with the same standard products.**
- **Can be installed in to land.**

DIRRICKX'S Professional coating provides customers 10 years' guarantee.
=> No ADDITIONAL COST FOR REPAINTING, MAINTENACE AT LEAST 10 YEARS.
=> ALSO APPRERANCE OF FACTORY BE WARRANTY.

- **Design including reinforced crimps.**

=> The Fence Post become very strong.

- **Luxury Design with EURO Standards.**

=> Beautiful, professional and luxury appearance for factory

WARRANTY

DIRRICKX'S Professional coating provides customers 10 years' guarantee.

COLOR

- 200 RAL COLOR
- 6 STANDARD COLORS: RAL6005, RAL7016, RAL7035, RAL7005, RAL9005, RAL9010)
- 10 POPULAR COLORS: RAL1015, RAL1023, RAL3002, RAL3004, RAL5010, RAL5015, RAL6009, RAL7030, RAL8014, RAL1021
- 10 "ELEGANT" COLLECTION

TECHNICAL SPECIFICATION

POST:

Post Dimension:	Diameter 60 x 2.0 mm
Strength of Post (1 meter since basement):	275 Kg
Heigh of Post	2300 mm
Post Distance:	3000 mm
Finishing:	
Galvanized zinic:	120g/m2
Polyester Painting (PE):	>=100 micromet thickness (10 years warranty)

PANEL

Horizontal Rail Bar:	50 x 25 x 1.2mm x 3 bar
Vertical Rail Bar	Diameter 25 x 1.0 mm
Heigh of Panel:	1900 mm
Finishing:	
Galvanized zinic:	120g/m2
Polyester Painting (PE):	>=100 micromet thickness (10 years warranty)

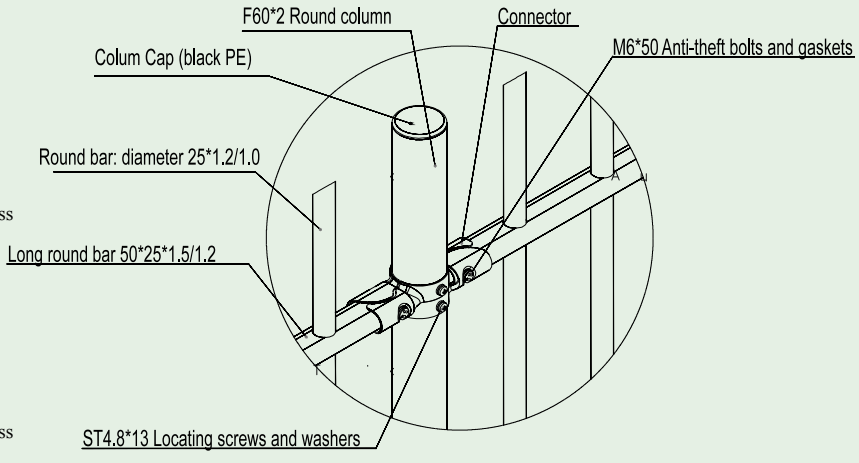

INSTALLATION METHOD

- Applicable for all types of configurarions: Curves, Corners, Slopes, on walls... with the same standard products.
  Appicable to all type of soil: Rock and Sand...Etc

SUPPLY TIME

6 Week from deposit payment